H&S TOOL, INC.
P.O. Box 393
Wadsworth, OH 44282 U.S.A.
Tel: +1 330 336 4550
Fax: +1 330 336 9159
www.hstool.com
www.multiprep.com

PARTS LIST
Model BR-90

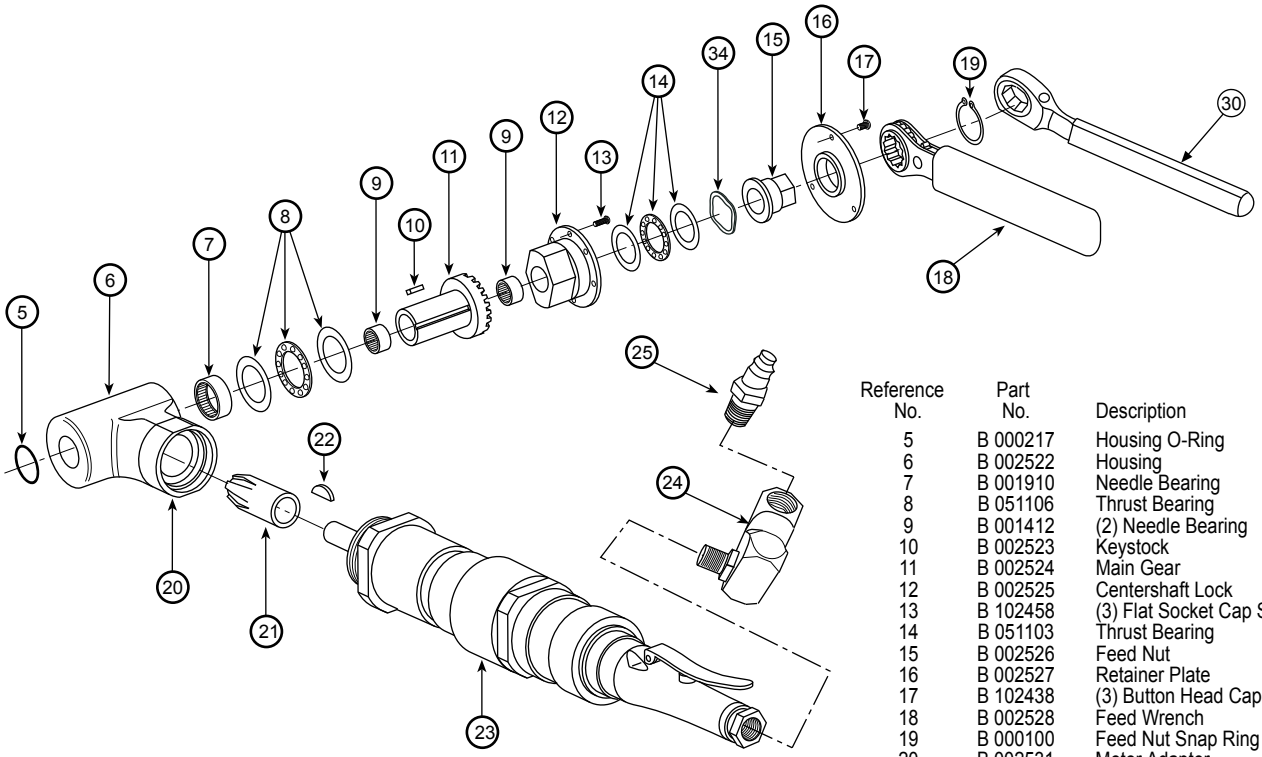

Reference No.	Part No.	Description
5	B 000217	Housing O-Ring
6	B 002522	Housing
7	B 001910	Needle Bearing
8	B 051106	Thrust Bearing
9	B 001412	(2) Needle Bearing
10	B 002523	Keystock
11	B 002524	Main Gear
12	B 002525	Centershaft Lock
13	B 102458	(3) Flat Socket Cap Screw
14	B 051103	Thrust Bearing
15	B 002526	Feed Nut
16	B 002527	Retainer Plate
17	B 102438	(3) Button Head Cap Screw
18	B 002528	Feed Wrench
19	B 000100	Feed Nut Snap Ring
20	B 002531	Motor Adapter
21	B 002529	Pinion Gear
22	B 002532	Woodruff Key
23	B 003460	Air Motor
24	B 002546	Drop Swivel, 1/2” NPT
25	B 002547	Male Plug, 1/2” NPT
30	B 002539	Rod Wrench
34	B 002519	(3) Spring Washer

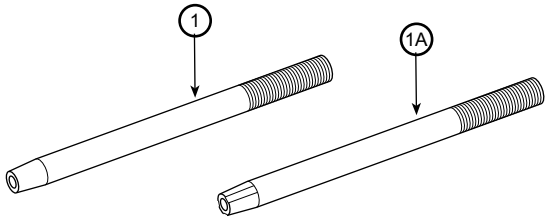

Reference No.	Part No.	Description
1	B 002520	Centershaft, Collet
1	B 002520L	Centershaft, Collet, Long
1A	B 002540	Centershaft, Wedge Set
1A	B 002540L	Centershaft, Wedge Set, Long

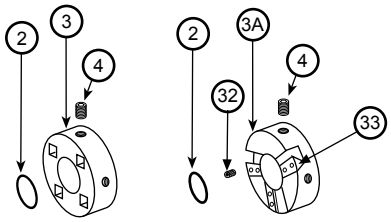

Reference No.	Part No.	Description
2	B 000114	Tool Holder O-Ring
3	B 002521	Tool Holder, Fixed
3A	B 002536	Tool Holder, Sliding
4	B 561856	Tool Holder Locking Screw
32	917-0001	(3) Differential Screws
33	000875	(3) Blade Lock

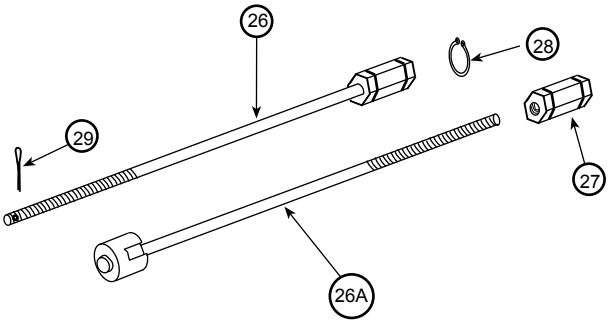

Reference No.	Part No.	Description
26	B 002550	Collet Rod
26	B 002550L	Collet Rod, Long
26A	B 002560	Wedge Rod, 5/8” O.D. Head
26A	B 002560L	Wedge Rod, 5/8” O.D. Head, Long
26A	B 002561	Wedge Rod, 7/8” O.D. Head
26A	B 002561L	Wedge Rod, 7/8” O.D. Head, Long
26A	B 002562	Wedge Rod, 1-1/4” O.D. Head
26A	B 002562L	Wedge Rod, 1-1/4” O.D. Head, Long
27	B 002543	Wedge Rod Nut
28	B 002544	(2) Retainer Ring
29	B 002545	Cotter Pin

PARTS LIST
Air Motor Gear Set

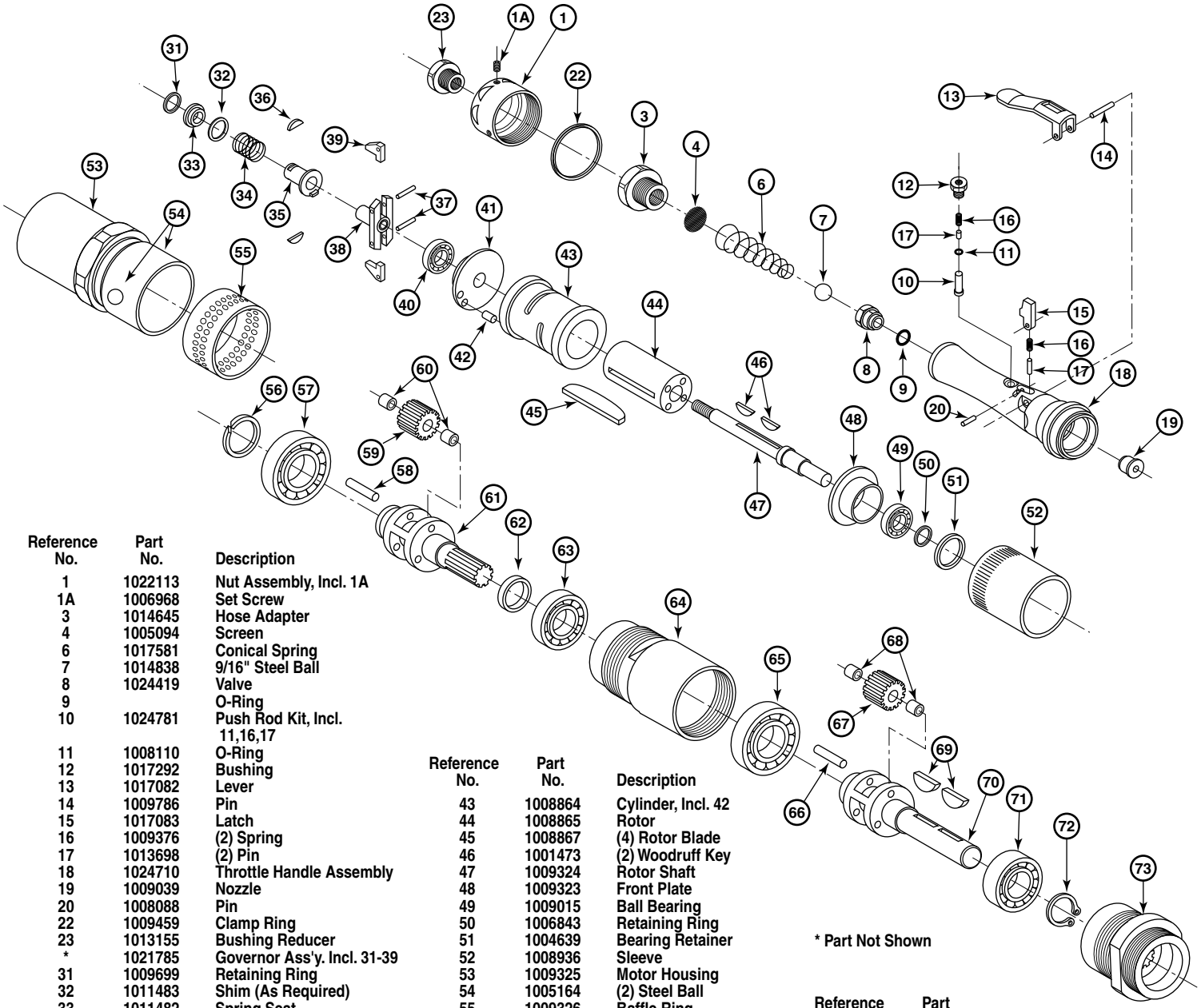

Reference No.	Part No.	Description
1	1022113	Nut Assembly, Incl. 1A
1A	1006968	Set Screw
3	1014645	Hose Adapter
4	1005094	Screen
6	1017581	Conical Spring
7	1014838	9/16" Steel Ball
8	1024419	Valve
9		O-Ring
10	1024781	Push Rod Kit, Incl. 11,16,17
11	1008110	O-Ring
12	1017292	Bushing
13	1017082	Lever
14	1009786	Pin
15	1017083	Latch
16	1009376	(2) Spring
17	1013698	(2) Pin
18	1024710	Throttle Handle Assembly
19	1009039	Nozzle
20	1008088	Pin
22	1009459	Clamp Ring
23	1013155	Bushing Reducer
*	1021785	Governor Ass'y. Incl. 31-39
31	1009699	Retaining Ring
32	1011483	Shim (As Required)
33	1011482	Spring Seat
34	1009152	Spring
35	1009120	Governor Valve
36	1009099	(2) Key
37	1008839	(2) Pin
38	1009119	Hub
39	1009121	(2) Gov. Weights
*	1025023	Motor Ass'y, Incl. 40-51
40	1009017	Ball Bearing
41	1008935	Rear Plate
42	1008840	Pin

Reference No.	Part No.	Description
43	1008864	Cylinder, Incl. 42
44	1008865	Rotor
45	1008867	(4) Rotor Blade
46	1001473	(2) Woodruff Key
47	1009324	Rotor Shaft
48	1009323	Front Plate
49	1009015	Ball Bearing
50	1006843	Retaining Ring
51	1004639	Bearing Retainer
52	1008936	Sleeve
53	1009325	Motor Housing
54	1005164	(2) Steel Ball
55	1009326	Baffle Ring
56	1009530	Retaining Ring
57	1009033	Ball Bearing
58	1009331	(3) Planet Pin
59	1009332	(3) Planet Gear
60	1009303	(6) Needle Bearing
61	1009598	Planet Cage
62	1009592	Planet Cage Washer
63	1005003	Ball Bearing
64	1013858	Internal Gear
65	1009333	Ball Bearing

* Part Not Shown

Reference No.	Part No.	Description
66	1009331	(3) Planet Pin
67	1009594	(3) Planet Gear
68	1009303	(6) Needle Bearing
69	1001311	(2) Woodruff Key
70	1015643	Planet Cage, Incl.:
*	1015356	Retaining Ring
71	1010135	Ball Bearing
72	1012796	Retaining Ring
73	1015641	Internal Gear